MHOU 1HBF CS

HOURGLASS Tap Range
Metallix Hourglass 1 Hole Bath Filler
Champagne Shimmer

Specification

Product Type:	Bathroom Taps
Main Construction Material:	Brass
Mount Type:	Deck Mounted
Handle Type:	Lever Handles
Connection Inlet:	M12 x 15mm Compression
Connection Outlet:	Flow Straightener
Number of Tap Holes:	1
Valve/Cartridge Type:	40mm Cartridge
Plumbing System Requirements:	Suitable for high pressure systems only
Minimum Dynamic Pressure:	1.0 Bar
Maximum Dynamic Pressure:	5.0 Bar
Maximum Hot Water Temperature: °C	65
Maximum Static Pressure: (bar)	10
Flow Type:	Single Flow
Isolation Included:	No

Features:

- Long life ceramic cartridge for added durability and ease of use
- Metal fixing nut for added durability
- Minimum working pressure of 1.0 bar

Product Certifications:

17.4 L/Min

For more products, visit our website:
http://www.bristan.com

Dimensions (measurements in mm)

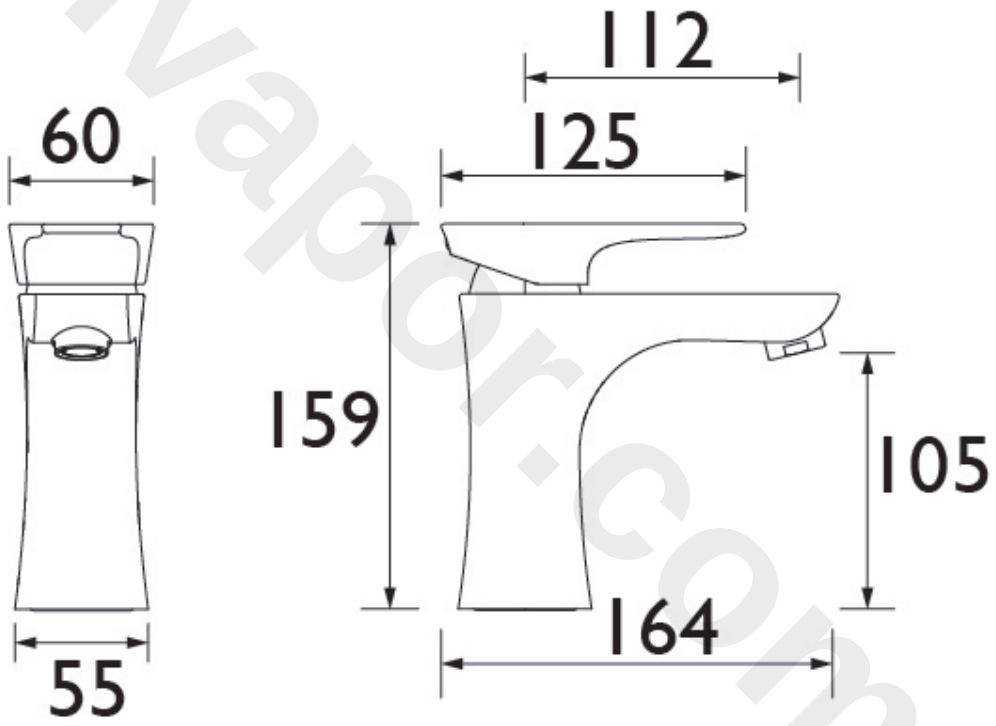

Flow Rates (l/min)

System Pressure (bar)	1	2	3	5
HOU 1HBF C	9.8	14.1	17.4	22.1

TECHNICAL DATA SHEET

TOP QUALITY 5 YEAR GUARANTEED

BRISTAN

D3

Bristan, Birch Coppice Business Park, Dordon, Tamworth, B78 1SG. Telephone: 0844 701 6274. Facsimile: 0844 701 6275. Web Site: www.bristan.com Email: enquire@bristan.com.
The information contained on this page was correct at date of issue. Fitting Dimensions are provided as a guide only. Some variation may occur due to manufacturing tolerances. Bristan pursues a policy of continuing improvement in design and performance of its products and so reserves the right to change specifications without prior notice.

www.divapor.com